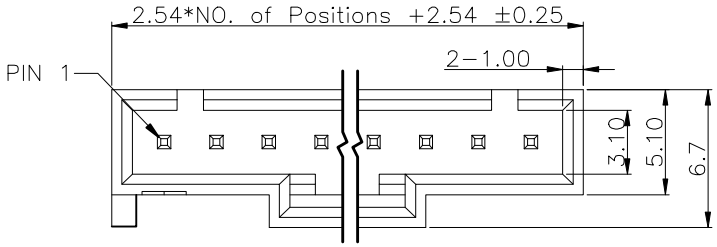

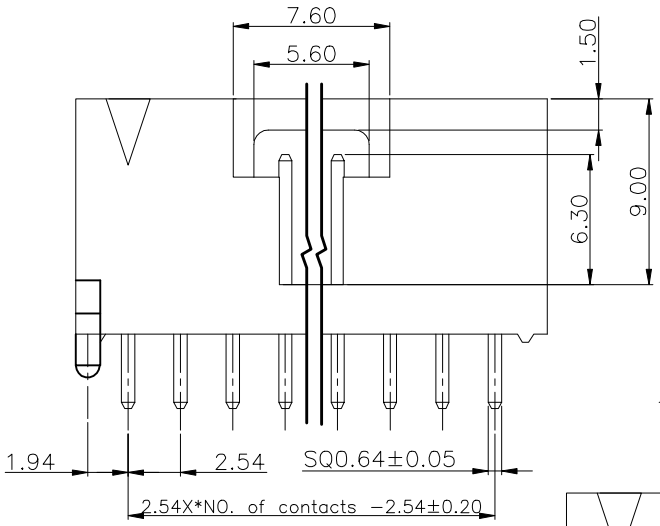

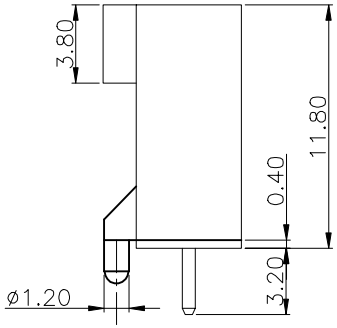

NOTE:
1. MATERIAL:
   HOUSING: (SEE TABLE), UL94 V-0,COLOR: (SEE TABLE).
   CONTACTS: BRASS.
2. FINISH:
   CONTACTS: GOLD FLASH OVER 1.27um [50μ"] MIN. NICKEL PLATED.
   GOLD 0.381 [15μ"] OVER 1.27um [50μ"] MIN. NICKEL PLATED.
3.ELECTRICAL: CONTACT RESISTANCE: 30 mΩ MAX.
   INSULATION RESISTANCE: 1000 MΩ MIN.
   DIELECTRIC WITHSTANDING: 1000V AC
   CURRENT RATING: 4 A MAX.
   VOLAGE RATING: 250 VAC.
4.ENVIRONMENTAL: OPERATING TEMPERATURE: -40° TO +105°C

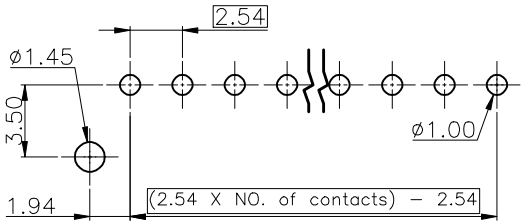

RECOMMENDED PCB LAYOUT
TOLERANCE: ±0.05

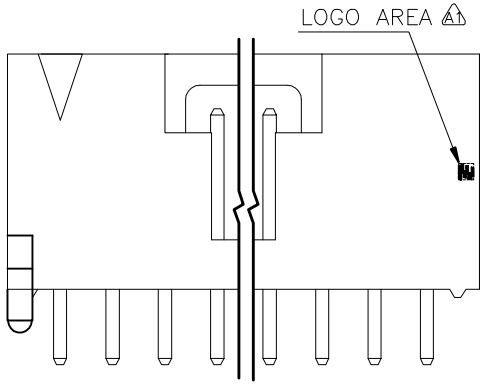

WITH TYCO LOGO TYPE

LACK PIN		TERMINAL PLATING	HOUSING COLOR	HOUSING MATERIAL	WEIGHT	POLES	OLD PRAT NO.	NEW PRAT NO.
A3 NO LACK PIN	NO TYCO LOGO	GOLD FLASH	BLACK	NY6T (GP)	0.725	1*3	———	05-0005-22
A2 5th	NO TYCO LOGO	GOLD FLASH	BLACK	NY6T	0.835	1*5	———	05-0005-21
A1 NO LACK PIN	NO TYCO LOGO	GOLD FLASH	GREEN	PBT (HF)	0.767	1*4	———	05-0005-20
			YELLWO					05-0005-19
			BLACK	NY66+30%G.F	0.767	1*4	CC1612304IB0G0S0	05-0005-18
	WITH TYCO LOGO	GOLD FLASH	BLACK	NY6T	0.875	1*5	CC1212305IB0G0S1	05-0005-17
					0.725	1*3	CC1212303IB0G0S1	05-0005-16
					0.767	1*4	CC1212304IB0G0S1	05-0005-15
		Au15u"					CC1212304IB070S2	05-0005-07
	NO TYCO LOGO	GOLD FLASH		PBT	1.3	1*8	CC1112308IB0G0S0	05-0005-14
				NY6T	0.9875	1*6	CC1212306IB0G0S0	05-0005-13
					0.875	1*5	CC1212305IB0G0S0	05-0005-12
				NY66+30%G.F	0.767	1*4	CC1612304IB0G0S0	05-0005-11
			RED(205C)	NY9T			CC1512304IR0G0S0	05-0005-10
			NATURAL				CC1512304IE0G0S0	05-0005-09
			BLACK				CC1512304IB0G0S0	05-0005-08
				NY6T			CC1212304IB0G0S0	05-0005-06
				PBT			CC1112304IB0G0S0	05-0005-05
			RED(205C)	NY66+30%G.F	0.725	1*3	CC1612303IR0G0S0	05-0005-04
				NY9T			CC1512303IR0G0S0	05-0005-03
			BLACK				CC1512303IB0G0S0	05-0005-02
				NY6T			CC1212303IB0G0S0	05-0005-01

TOLERANCES UNLESS OTHERWISE SPECIFIED
X. ±0.30 X.° ±2°
.X ±0.25 X.X° ±1°
.XX ±0.20
.XXX ±0.10

JS HAOGUO(Zhongxiang) Limited Company

Customers Drawing	TITEL: CDIN CONNECTOR VERTICAL, DIP.						
DWN	XIAOXU_LIU	Part NO.	SEE TABLE	Scale	1 : 1		
CHKD	CIYONG_JIANG	Drawing No.	C-05-0005	Sheet	1 of 1		
APVD	DAVID_ZHONG	UNIT	mm	SIZE	A4	Third Angle Projection	

ECN(DCN) NO.	REV.	DATE	DESCRIPTION	CHANGE	APVD
———	A3	2014.6.25	Add Part Number	CXW	DZ
———	A1	2013.11.4	Add Part Number	XU	DZ
———	A	2009.6.29	RELEASED	DONG	DZ