REV.	DESCRIPTION	DATE	DWN	APVD
A	RELEASED	27MAY09	MD	DZ
A1	△A1	13Apr12	XX	WZ

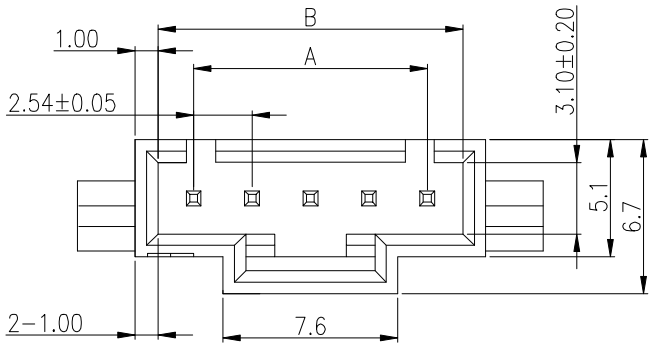

NOTES:
1.MATERIAL:
HOUSING: (SEE TABLE), UL94 V-2(PA66)/UL94 V-0(PA6T), COLOR: BLACK
CONTACTS: BRASS.
2.CONTACTS: (SEE TABLE) OVER 1.27um [50m"] MIN. NICKEL PLATED.
3.ELECTRICAL: CONTACT RESISTANCE: 30 mΩ MAX.
INSULATION RESISTANCE: 1000 MΩ MIN.
DIELECTRIC WITHSTANDING: 1000V AC
CURRENT RATING: 4 A MAX.
VOLAGE RATING: 250 VAC.
4.ENVIRONMENTAL: OPERATING TEMPERATURE: -40° +105°

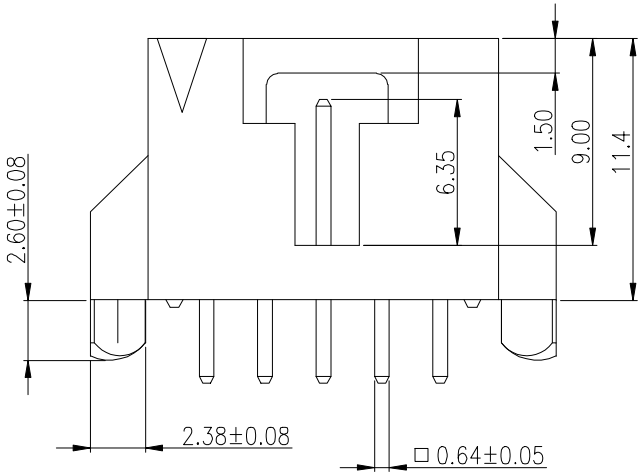

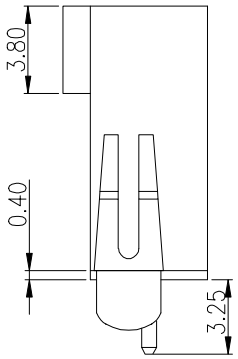

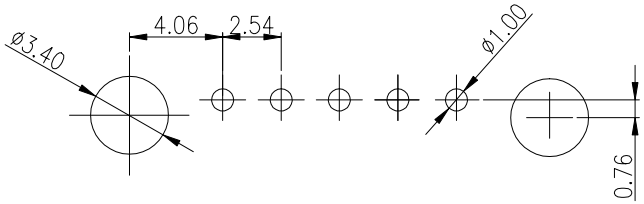

RECOMMENDED P.C.B. LAYOUT

DIM B	DIM A	PLATE THICKNESS	HOUSING MATERIAL	POLES	OLD PRAT NO.	NEW PRAT NO.
25.95	22.86	BRIGHT TIN	PA6T	1*10	———	05-0003-06
20.87	17.78	BRIGHT TIN	PA6T	1*8	———	05-0003-05
13.25	10.16	1u"Au MIN	PA6T	1*5	———	05-0003-04
		BRIGHT TIN	PA6T		CB0212305IB0T0S0	05-0003-03
		G/F	HF PA66		CB0S12305IB0G0S0	05-0003-02
		G/F	PT6T		CB0212305IB0G0S0	05-0003-01

OTHERWISE SPECIFIED:
0 PLC ± –
1 PLC ± 0.3
2 PLC ± 0.2
3 PLC ± 0.15
4 PLC ± –
ANGLES ± 3°

MATERIAL: SEE NOTE
FINISH: SEE NOTE
PROJECTION:

DWN XIAOXU_LIU 13Apr2012
CHK CIYONG_JIANG 13Apr2012
APVD WEI_ZHANG 13Apr2012
PRODUCT SPEC JS-GC03137-A1
APPLICATION SPEC CDIN-01-01
WEIGHT SEE TABLE
DIMENSIONS: MM

Zhongxiang Electron Science CO.,LTD

NAME: CDIN CONNECTOR VERTICAL, DIP.

SIZE A3 | DRAWING NO C-05-0003

CUSTOMER DRAWING | SCALE — | SHEET 1 OF 1 | REV A1