REV.	DESCRIPTION	DATE	DWN	APVD
A	RELEASED	20APR10	S.X	J.Y
A3	A3	25FEB11	BH	DZ

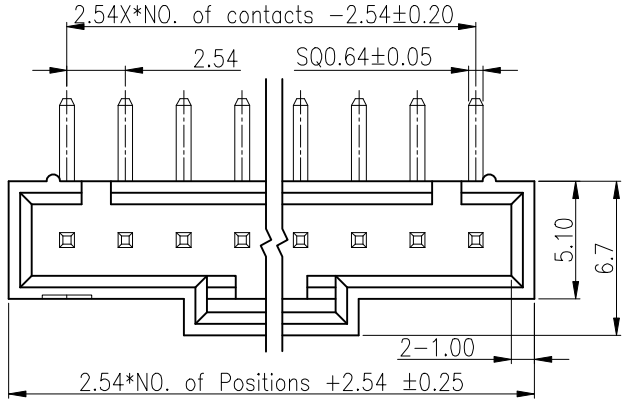

NOTES:
1.MATERIAL:
HOUSING: (SEE TABLE), UL94 V−0, COLOR: (SEE TABLE).
CONTACTS: BRASS.
2.CONTACTS: GOLD FLASH OVER 1.27μm [50μ"] MIN. NICKEL PLATED.
3.ELECTRICAL: CONTACT RESISTANCE: 30 mΩ MAX.
INSULATION RESISTANCE: 1000 MΩ MIN.
DIELECTRIC WITHSTANDING: 1000V AC
CURRENT RATING: 4 A MAX.
VOLAGE RATING: 250 VAC.
4.ENVIRONMENTAL: OPERATING TEMPERATURE: −40° TO +105°C

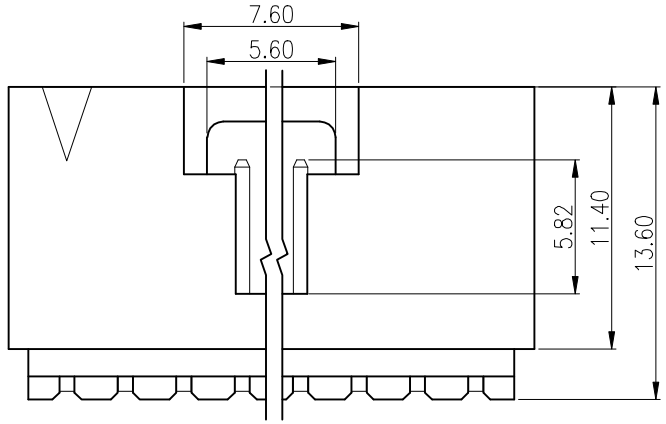

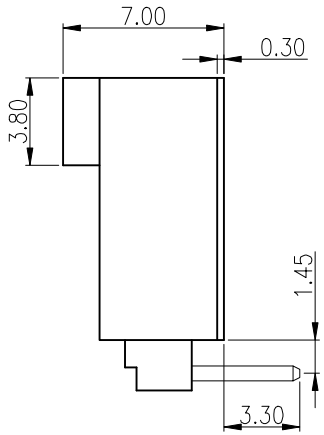

HOUSING COLOR	HOUSING MATERIAL	POLES	OLD PRAT NO.	NEW PRAT NO.
BLACK	PA6T	1*8		05−0002−13
BLACK	NY6T	1*5		05−0002−12
BLACK	PBT (Halogen−free)	1*5		05−0002−11
BLACK	PBT	1*8	CA1116008IB0G0R0	05−0002−10
BLACK	PBT	1*7	CA1116007IB0G0R0	05−0002−09
BLACK	PBT	1*6	CA1116006IB0G0R0	05−0002−08
BLACK	PBT	1*5	CA1116005IB0G0R0	05−0002−07
NATURAL	NY6T	1*4	CA1216004IE0G0R0	05−0002−06
BLACK	NY6T	1*4	CA1216004IB0GGR0	05−0002−05
GREEN(341C)	PBT	1*4	CA1116004IG0G0R0	05−0002−04
BLACK	PBT	1*4	CA1116004IB0G0R0	05−0002−03
BLACK	NY6T	1*3	CA1216003IB0G0R0	05−0002−02
BLACK	PBT	1*3	CA1116003IB0G0R0	05−0002−01

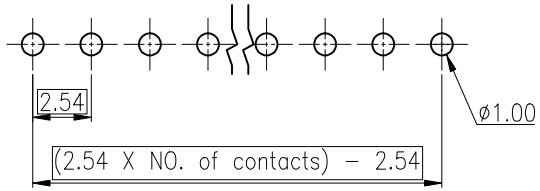

RECOMMENDED PCB LAYOUT
TOLERANCE: ±0.05

TOLERANCES UNLESS OTHERWISE SPECIFIED:
0 PLC ± −
1 PLC ± 0.3
2 PLC ± 0.2
3 PLC ± 0.15
4 PLC ± −
ANGLES ± 3°

MATERIAL: SEE NOTE
FINISH: SEE NOTE
PROJECTION

DWN BO_BO 20JAN2011
CHK GAVIN_CHEN 20JAN2011
APVD DAVID_ZHONG 20JAN2011
PRODUCT SPEC JS−GC03137−A1
APPLICATION SPEC CDIN−01−01
WEIGHT SEE TABLE
DIMENSIONS: MM

Zhongxiang Electron Science CO.,LTD

NAME: CDIN CONNECTOR RIGHT ANGLE, DIP.

SIZE A3 | DRAWING NO C−05−0002
CUSTOMER DRAWING | SCALE — | SHEET 1 OF 1 | REV A3